TFT DISPLAY SPECIFICATION

WINSTAR

WINSTAR Display Co.,Ltd.

華凌光電股份有限公司

Winstar Display Co., LTD
華凌光電股份有限公司
WEB: https://www.winstar.com.tw E-mail: sales@winstar.com.tw

SPECIFICATION

CUSTOMER : _____

MODULE NO.: WF39BSLASDNN0

APPROVED BY: **(FOR CUSTOMER USE ONLY)**	**PCB VERSION:** **DATA:**

SALES BY	APPROVED BY	CHECKED BY	PREPARED BY
			葉虹蘭
ISSUED DATE: 2022/12/30			

TFT Display Inspection Specification: https://www.winstar.com.tw/technology/download.html
Precaution in use of TFT module: https://www.winstar.com.tw/technology/download/declaration.html

WINSTAR DISPLAY CO., LTD

RECORDS OF REVISION

DOC. FIRST ISSUE

VERSION	DATE	REVISED PAGE NO.	**SUMMARY**
0	2018/02/23		First issue
A	2018/03/06		Modify Block Diagram.
B	2018/04/19		Add TFT Driver IC & TFT Interface
C	2021/04/16		Modify Contour Drawing
D	2022/12/30		Modify Optical Characteristics

WINSTAR DISPLAY CO., LTD

Contents

1.Module Classification Information

2.Summary

3.General Specification

4.Absolute Maximum Ratings

5.Electrical Characteristics

6.DC Characteristics

7.Interface Timing

8.Optical Characteristics

9.Interface

10.Block Diagram

11.Reliability

12.Contour Drawing

13.Other

WINSTAR DISPLAY CO., LTD

1.Module Classification Information

W	F	39	B	S	L	A	S	D	N	N	0	#
①	②	③	④	⑤	⑥	⑦	⑧	⑨	⑩	⑪	⑫	⑬

①	Brand：WINSTAR DISPLAY CORPORATION		
②	Display Type：F→TFT Type, J→Custom TFT		
③	Display Size：3.9” TFT		
④	Model serials no.		
⑤	Backlight Type：	F→CCFL, White S→LED, High Light White	T→LED, White Z→Nichia LED, White
⑥	LCD Polarize Type/ Temperature range/ Gray Scale Inversion Direction	A→Transmissive, N.T, IPS TFT C→Transmissive, N. T, 6:00 ; F→Transmissive, N.T,12:00 ; I→Transmissive, W. T, 6:00 K→Transflective, W.T,12:00 L→Transmissive, W.T,12:00 N→Transmissive, Super W.T, 6:00	Q→Transmissive, Super W.T, 12:00 R→Transmissive, Super W.T, O-TFT V→Transmissive, Super W.T, VA TFT W→Transmissive, Super W.T, IPS TFT X→Transmissive, W.T, VA TFT Y→Transmissive, W.T, IPS TFT Z→Transmissive, W.T, O-TFT
⑦	A：TFT LCD B：TFT+SCREW HOLES+CONTROL BOARD C：TFT+ SCREW HOLES +A/D BOARD D：TFT+ SCREW HOLES +A/D BOARD+CONTROL BOARD E：TFT+ SCREW HOLES +POWER BOARD		F：TFT+CONTROL BOARD G：TFT+ SCREW HOLES H：TFT+D/V BOARD I：TFT+ SCREW HOLES +D/V BOARD J：TFT+POWER BD

⑧ Resolution:

A	128160	B	320234	C	320240	D	480234	E	480272	F	640480
G	800480	H	1024600	I	320480	J	240320	K	800600	L	240400
M	1024768	N	128128	P	1280800	Q	480800	R	640320	S	480128
T	800320	U	8001280	V	176220	W	1280398	X	1024250	Y	1920720
Z	800200	2	1024324	3	7201280	4	19201200	5	1366768	6	1280320

⑨ D: Digital L：LVDS M:MIPI

⑩ Interface:

N	Without control board	A	8Bit	B	16Bit	H	HDMI
I	I2C Interface	R	RS232	S	SPI Interface	U	USB

⑪ TS:

N	Without TS	T	Resistive touch panel	C	Capacitive touch panel (G-F-F)
G	Capacitive touch panel (G-G)	C1	Capacitive touch panel (G-F-F)+OCA		
C2	Capacitive touch panel (G-F-F)+OCR	G1	Capacitive touch panel (G-G)+OCA		
G2	Capacitive touch panel (G-G)+OCR	B	CTP+GG+USB		

⑫	Version: X:Raspberry pi	
⑬	Special Code	#:Fit in with ROHS directive regulations

WINSTAR DISPLAY CO., LTD

WINSTAR DISPLAY CO., LTD

2.Summary

TFT 3.9” is a TN transmissive type color active matrix TFT liquid crystal display that use amorphous silicon TFT as switching devices. This module is a composed of a TFT_LCD module, It is usually designed for industrial application and this module follows RoHs.

WINSTAR DISPLAY CO.,LTD

3.General Specifications

Item	Dimension	Unit
Size	3.9	inch
Dot Matrix	480x128 x RGB (TFT)	dots
Module dimension	105.5(W) x 37.0(H) x 3.05(D)	mm
Active area	95.04 x 25.34	mm
Dot pitch	0.066(W)x 0.198(H)	mm
LCD type	TFT, Normally White, Transmissive	
View Direction	6 o'clock	
Gray Scale Inversion Direction	12 o'clock	
Aspect Ratio	Bar Type	
TFT Driver IC	HX8278-A Or Equal	
TFT Interface	RGB-24BIT (SYNC mode)	
Backlight Type	LED,Normally White	
With /Without TP	Without TP	
Surface	Anti-Glare	

*Color tone slight changed by temperature and driving voltage.

WINSTAR DISPLAY CO.,LTD

4.Absolute Maximum Ratings

Item	Symbol	Min	Typ	Max	Unit
Operating Temperature	TOP	-20	—	+70	℃
Storage Temperature	TST	-30	—	+80	℃

Note: Device is subject to be damaged permanently if stresses beyond those absolute maximum ratings listed above

1. Temp. 60℃, 90% RH MAX. Temp.＞60℃, Absolute humidity shall be less than 90% RH at 60℃

WINSTAR DISPLAY CO.,LTD

5.Electrical Characteristics

5.1. Operating conditions

Item	Symbol	Condition	Min	Typ	Max	Unit	Remark
Supply Voltage For LCM	VCC	—	3.0	3.3	3.6	V	
Supply Current For LCM	ICC	—	—	15	25	mA	Note 1

Note 1 : This value is test for VCC =3.3V , Ta=25 ℃ only

5.2. LED driving conditions

Item	Symbol	MIN	TYP	MAX	Unit	Remark
Forward Current	ILED	—	40	—	mA	Note 1,2,3,4
Forward Voltage	VLED+	19.6	21	23.8	V	
Backlight life time	—	—	50000	—	hr	

Note 1 : There are 1 Groups LED

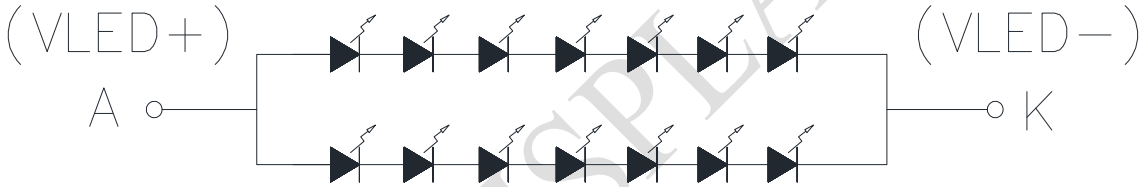

CIRCUIT DIAGRAM

Note 2 : Ta = 25 ℃
Note 3 : Brightness to be decreased to 50% of the initial value
Note 4 : The single LED lamp case

WINSTAR DISPLAY CO., LTD

6.DC CHARATERISTICS

Parameter	Symbol	Rating			Unit	Condition
		Min	Typ	Max		
Low level input voltage	V_{IL}	0	-	0.3VCC	V	
High level input voltage	V_{IH}	0.7VCC	-	VCC	V	

WINSTAR DISPLAY CO.,LTD

7.Interface Timing

7.1. Parallel RGB in SYNC mode

7.1.1 Horizontal

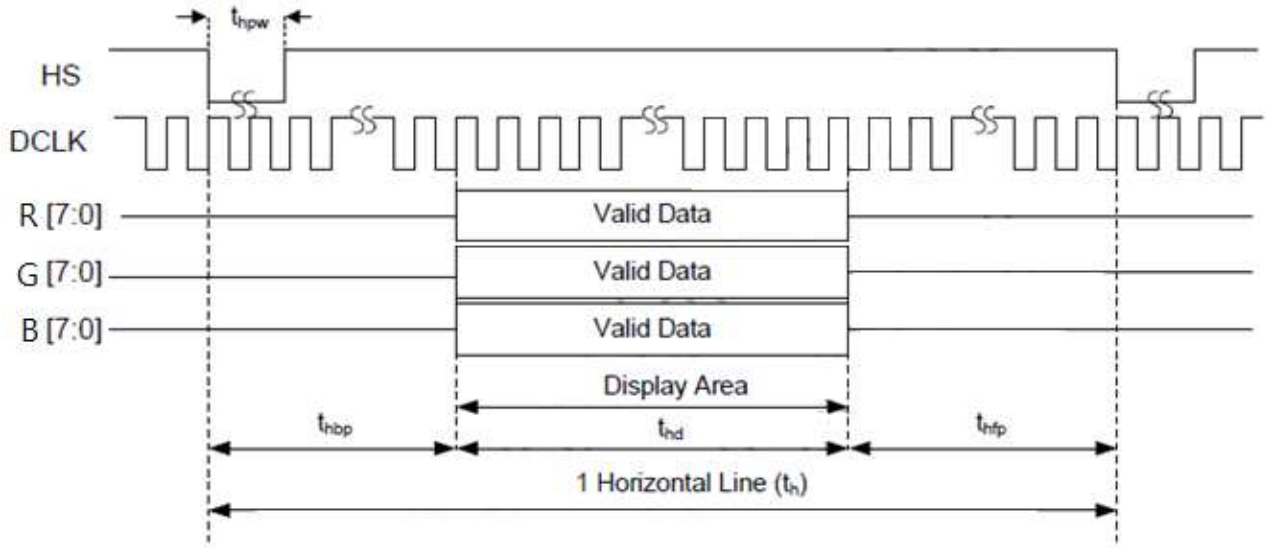

Figure 7.1: Horizontal input timing in Sync mode

7.1.2 Horizontal

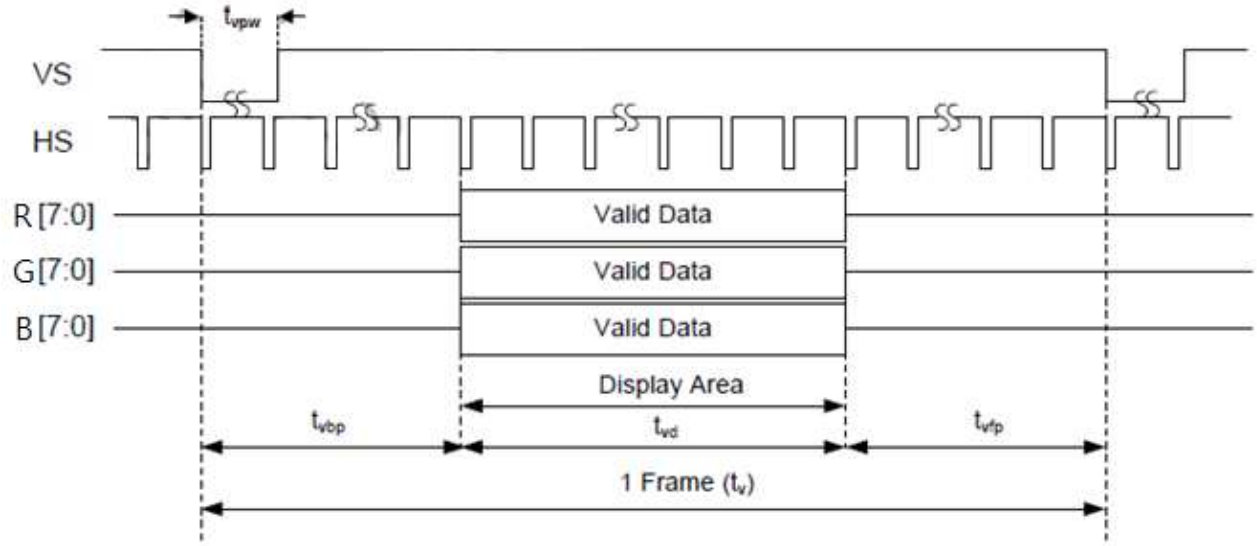

Figure 7.2: Vertical input timing in Sync mode

7.2. Parallel SYNC mode RGB input timing table

Item		Symbol	Min	Typ	Max	Unit
CLK frequency		Fclk	-	9.05	-	MHz
DCLK Period		Tclk	-	111	-	ns
HSYNC	Period Time	Th	510	524	862	DCLK
	Display Period	Thdisp	-	480	-	DCLK
	Back Porch	Thbp	6	16	127	DCLK
	Front Porch	Thfp	24	28	255-	DCLK
	Pulse Width	Thw	11	16	127	DCLK
VSYNC	Period Time	Tv	280	288	526	H
	Display Period	Tvdisp	-	272	-	H
	Back Porch	Tvbp	4	8	127	H
	Front Porch	Tvfp	4	8	127	H
	Pulse Width	Tvw	1	3	20	H

WINSTAR DISPLAY CO., LTD

8.Optical Characteristics

Item		Symbol	Condition.	Min	Typ.	Max.	Unit	Remark
Response time		Tr+Tf	θ=0°、Φ=0°	-	25	40	ms	Note 3
Contrast ratio		CR	At optimized viewing angle	300	500	-	-	Note 4
Color Chromaticity	White	Wx	θ=0°、Φ=0	0.264	0.314	0.364	-	Note 2,5
		Wy		0.269	0.319	0.369	-	
Viewing angle (Gray Scale Inversion Direction)	Hor.	ΘR	CR≧10	-	65	-	Deg.	Note 1
		ΘL		-	65	-		
	Ver.	ΦT		-	65	-		
		ΦB		-	50	-		
Brightness		-	-	900	1000	-	cd/m^2	Center of display
Uniformity		(U)	-	75	-	-	%	Note 5

Ta=25±2℃, ILED=40mA

Note 1: Definition of viewing angle range

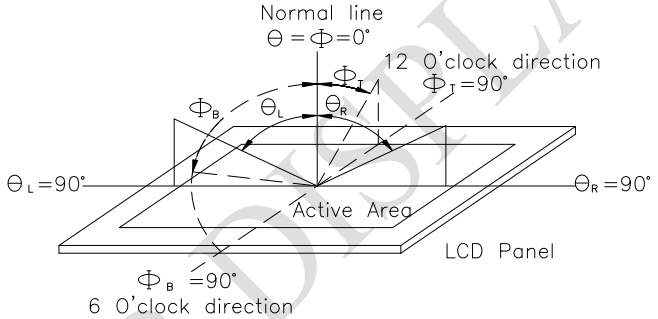

Fig. 8.1. Definition of viewing angle

Note 2: Test equipment setup:

After stabilizing and leaving the panel alone at a driven temperature for 10 minutes, the measurement should be executed. Measurement should be executed in a stable, windless, and dark room. Optical specifications are measured by Topcon BM-7orBM-5 luminance meter 1.0° field of view at a distance of 50cm and normal direction.

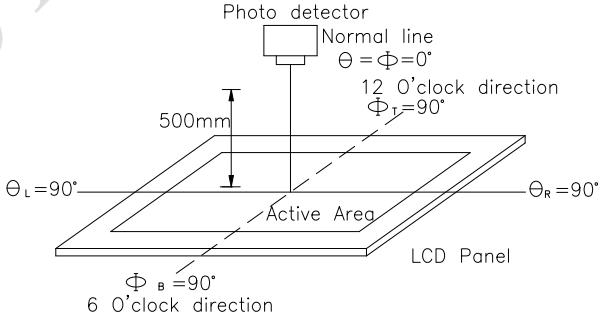

Fig. 8.2. Optical measurement system setup

Note 3: Definition of Response time:

The response time is defined as the LCD optical switching time interval between “White” state

WINSTAR DISPLAY CO., LTD

and “Black” state. Rise time, Tr, is the time between photo detector output intensity changed from 90%to 10%. And fall time, Tf, is the time between photo detector output intensity changed from 10%to 90%

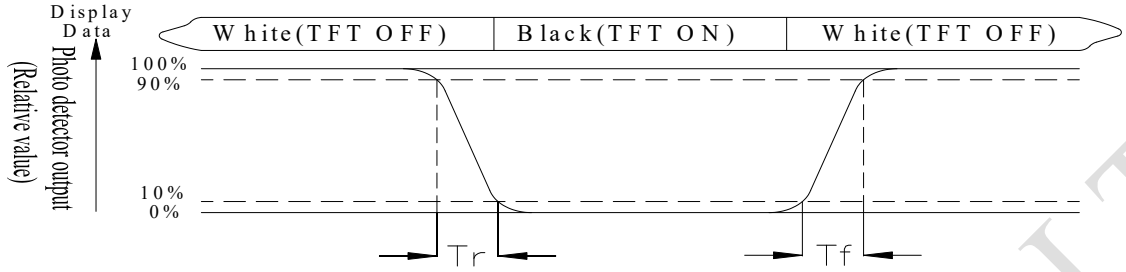

Note 4: Definition of contrast ratio:
The contrast ratio is defined as the following expression.

$$\text{Contrast ratio (CR)} = \frac{\text{Luminance measured when LCD on the "White" state}}{\text{Luminance measured when LCD on the "Black" state}}$$

Note 5: Definition of Luminance Uniformity
Active area is divided into 9 measuring areas (reference the picture in below). Every measuring point is placed at the center of each measuring area.
Luminance Uniformity (U) = Lmin/Lmax x100%
L = Active area length
W = Active area width

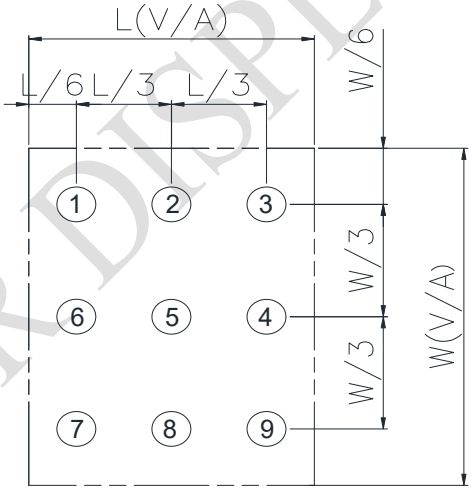

Fig8.3. Definition of uniformity

Note 6: Definition of color chromaticity (CIE 1931)
Color coordinates measured at the center point of LCD

Note 7: Measured at the center area of the panel when all the input terminals of LCD panel are electrically opened.

WINSTAR DISPLAY CO., LTD

9.Interface

9.1. LCM PIN Definition

No.	Symbol	Description	Remark
1	VLED-	Backlight LED Cathode	
2	VLED+	Backlight LED Anode.	
3	GND	System Ground	
4	VCC	Power supply for logic operation	
5~12	R0~R7	Data bus	
13~20	G0~G7	Data bus	
21~28	B0~B7	Data bus	
29	GND	System Ground	
30	DCLK	Pixel clock signal	
31	DISP	Display on/off control	
32	HSYNC	Horizontal Sync signal	Note1
33	VSYNC	Vrtical Sync signal	Note1
34	NC	No connection (Option DE)	Note1
35	NC	No connection	
36	GND	System Ground	
37	NC	No connection (Option XR for RTP)	
38	NC	No connection (Option YD for RTP)	
39	NC	No connection (Option XL for RTP)	
40	NC	No connection (Option YU for RTP)	

Note1: This module default function is for SYNC mode, if this module want change to use DE mode , the FPC have to modify resistive jumper

WINSTAR DISPLAY CO., LTD

10.Block Diagram

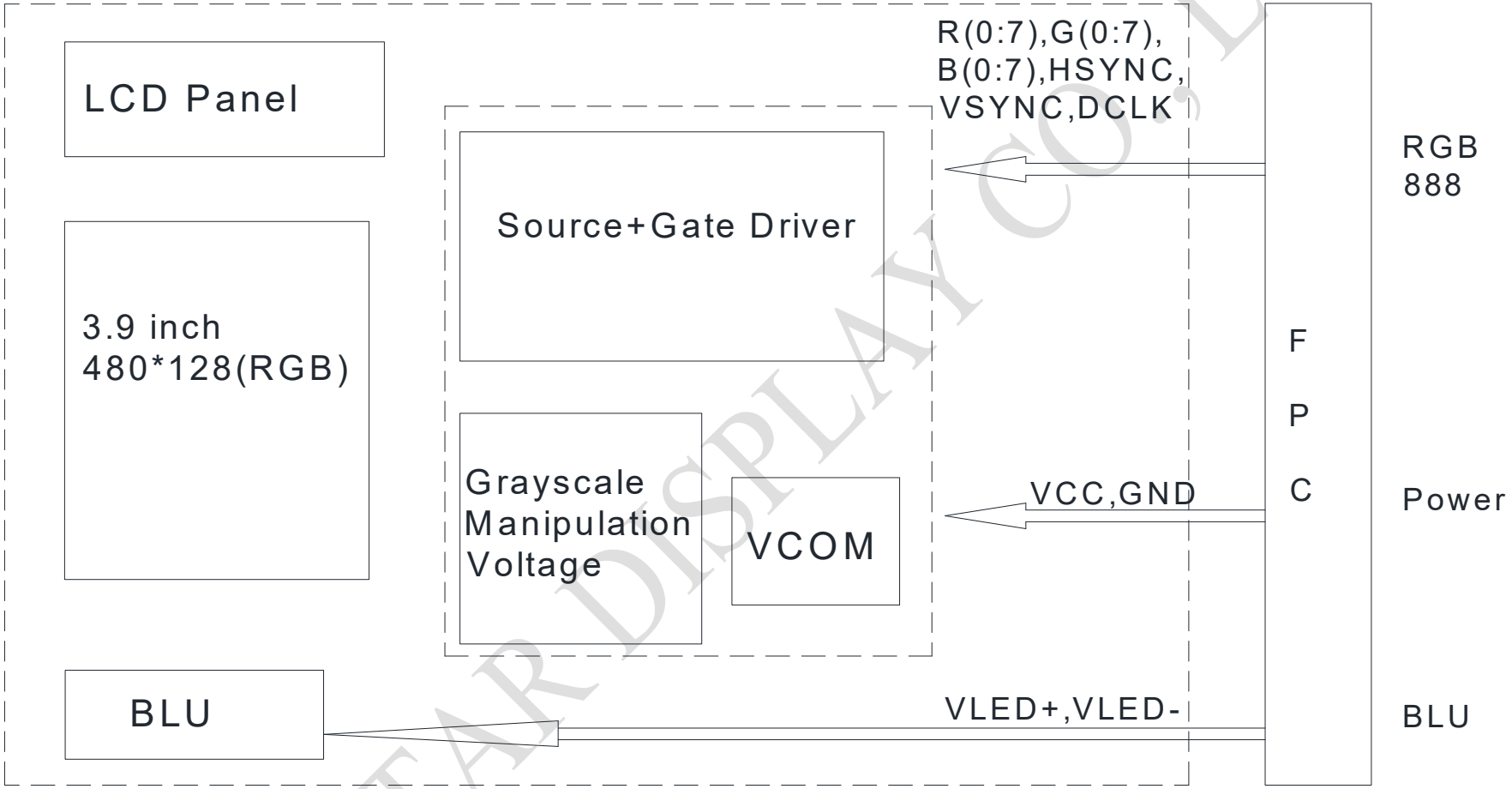

WINSTAR DISPLAY CO.,LTD

11.Reliability

Content of Reliability Test (Wide temperature, -20℃~70℃)

Environmental Test			
Test Item	**Content of Test**	**Test Condition**	**Note**
High Temperature storage	Endurance test applying the high storage temperature for a long time.	80℃ 200hrs	2
Low Temperature storage	Endurance test applying the low storage temperature for a long time.	-30℃ 200hrs	1,2
High Temperature Operation	Endurance test applying the electric stress (Voltage & Current) and the thermal stress to the element for a long time.	70℃ 200hrs	——
Low Temperature Operation	Endurance test applying the electric stress under low temperature for a long time.	-20℃ 200hrs	1
High Temperature/ Humidity Operation	The module should be allowed to stand at 60℃,90%RH max	60℃,90%RH 96hrs	1,2
Thermal shock resistance	The sample should be allowed stand the following 10 cycles of operation -20℃ 25℃ 70℃ 30min 5min 30min 1 cycle	-20℃/70℃ 10 cycles	——
Vibration test	Endurance test applying the vibration during transportation and using.	Total fixed amplitude : 1.5mm Vibration Frequency : 10~55Hz One cycle 60 seconds to 3 directions of X,Y,Z for Each 15 minutes	3
Static electricity test	Endurance test applying the electric stress to the terminal.	VS=±600V(contact), ±800v(air), RS=330Ω CS=150pF 10 times	——

Note1: No dew condensation to be observed.
Note2: The function test shall be conducted after 4 hours storage at the normal Temperature and humidity after remove from the test chamber.
Note3: The packing have to including into the vibration testing.

WINSTAR DISPLAY CO., LTD

12.Contour Drawing

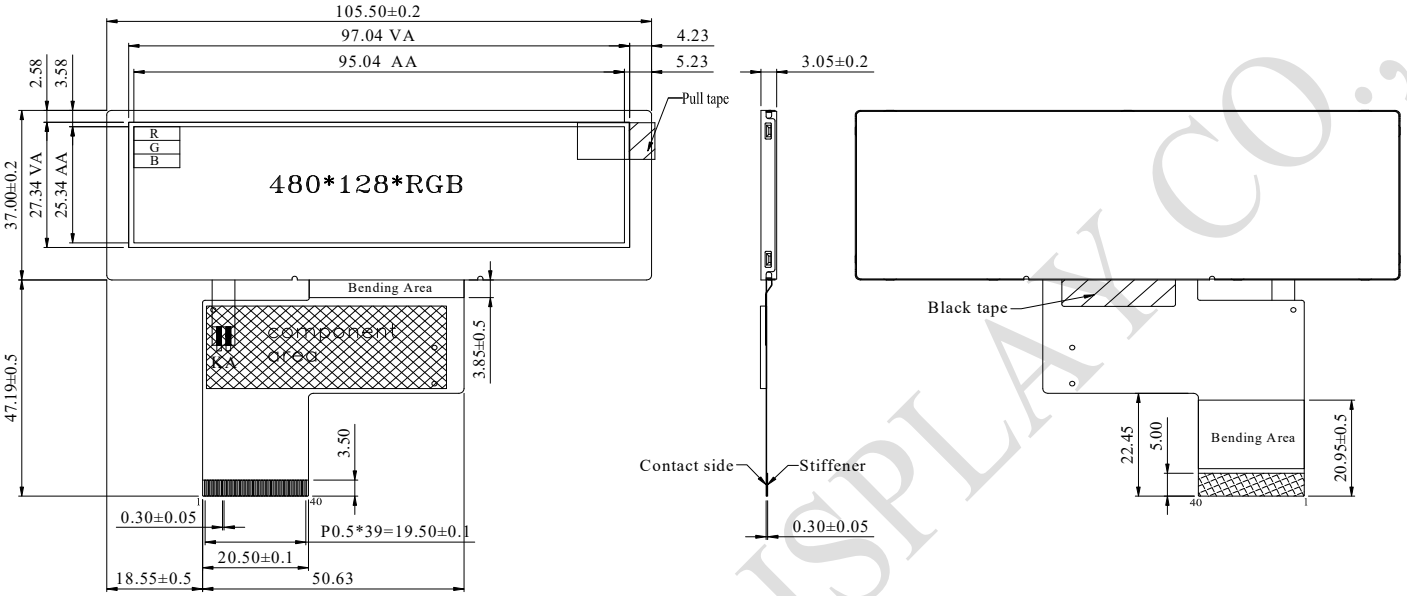

PIN NO.	SYMBOL	PIN NO.	SYMBOL
1	VLED-	21	B0
2	VLED+	22	B1
3	GND	23	B2
4	VCC	24	B3
5	R0	25	B4
6	R1	26	B5
7	R2	27	B6
8	R3	28	B7
9	R4	29	GND
10	R5	30	DCLK
11	R6	31	DISP
12	R7	32	HSYNC
13	G0	33	VSYNC
14	G1	34	NC
15	G2	35	NC
16	G3	36	GND
17	G4	37	NC
18	G5	38	NC
19	G6	39	NC
20	G7	40	NC

CIRCUIT DIAGRAM

The non-specified tolerance of dimension is ±0.3 mm .

WINSTAR DISPLAY CO.,LTD

winstar

LCM Sample Estimate Feedback Sheet

Module Number：_____ **Page: 1**

1、Panel Specification：

1. Panel Type： □ Pass □ NG ,_____
2. View Direction： □ Pass □ NG ,_____
3. Numbers of Dots： □ Pass □ NG ,_____
4. View Area： □ Pass □ NG ,_____
5. Active Area： □ Pass □ NG ,_____
6. Operating Temperature： □ Pass □ NG ,_____
7. Storage Temperature： □ Pass □ NG ,_____
8. Others：_____

2、Mechanical

1. PCB Size： □ Pass □ NG ,_____
2. Frame Size： □ Pass □ NG ,_____
3. Material of Frame： □ Pass □ NG ,_____
4. Connector Position： □ Pass □ NG ,_____
5. Fix Hole Position： □ Pass □ NG ,_____
6. Backlight Position： □ Pass □ NG ,_____
7. Thickness of PCB： □ Pass □ NG ,_____
8. Height of Frame to PCB： □ Pass □ NG ,_____
9. Height of Module： □ Pass □ NG ,_____
10. Others： □ Pass □ NG ,_____

3、Relative Hole Size：

1. Pitch of Connector： □ Pass □ NG ,_____
2. Hole size of Connector： □ Pass □ NG ,_____
3. Mounting Hole size： □ Pass □ NG ,_____
4. Mounting Hole Type： □ Pass □ NG ,_____
5. Others： □ Pass □ NG ,_____

4、Backlight Specification：

1. B/L Type： □ Pass □ NG ,_____
2. B/L Color： □ Pass □ NG ,_____
3. B/L Driving Voltage (Reference for LED Type)： □ Pass □ NG ,_____
4. B/L Driving Current： □ Pass □ NG ,_____
5. Brightness of B/L： □ Pass □ NG ,_____
6. B/L Solder Method： □ Pass □ NG ,_____
7. Others： □ Pass □ NG ,_____

WINSTAR DISPLAY CO., LTD

>> Go to page 2 <<

5、Electronic Characteristics of Module：

1. Input Voltage： □ Pass □ NG ,_____
2. Supply Current： □ Pass □ NG ,_____
3. Driving Voltage for LCD： □ Pass □ NG ,_____
4. Contrast for LCD： □ Pass □ NG ,_____
5. B/L Driving Method： □ Pass □ NG ,_____
6. Negative Voltage Output： □ Pass □ NG ,_____
7. Interface Function： □ Pass □ NG ,_____
8. LCD Uniformity： □ Pass □ NG ,_____
9. ESD test： □ Pass □ NG ,_____
10. Others： □ Pass □ NG ,_____

6、Summary：

Sales signature：_____

Customer Signature：_____ **Date**：_____/_____/_____

WINSTAR DISPLAY CO., LTD